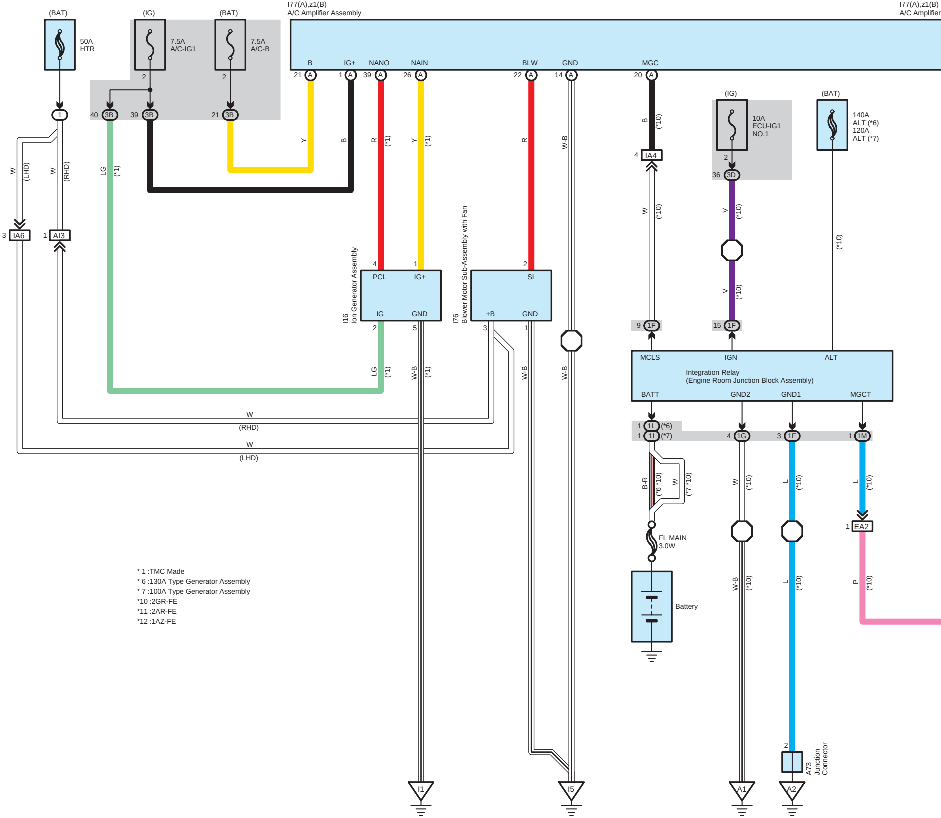
(BAT)
50A
HTR
(IG)
7.5A
A/C-IG1
(BAT)
7.5A
A/C-B
I77(A),z1(B)
A/C Amplifier Assembly
I77(A),z1(B)
A/C Amplifier
B
IG+
NANO
NAIN
BLW
GND
MGC
21 A
1 A
39 A
26 A
22 A
14 A
20 A
2
2
1
40 3B
39 3B
21 3B
W (LHD)
W (RHD)
LG (*1)
Y
B
R (*1)
Y (*1)
R
W-B
B (*10)
4 IA4
W (*10)
3 IA6
1 AI3
(IG)
10A
ECU-IG1
NO.1
2
36 3D
V (*10)
V (*10)
(BAT)
140A
ALT (*6)
120A
ALT (*7)
(*10)
I16
Ion Generator Assembly
4 PCL
1 IG+
IG
GND
2
5
LG (*1)
W-B (*1)
I76
Blower Motor Sub-Assembly with Fan
2 SI
+B
GND
3
1
W-B
W-B
W
(RHD)
W
(LHD)
9 1F
15 1F
MCLS
IGN
ALT
Integration Relay
(Engine Room Junction Block Assembly)
BATT
GND2
GND1
MGCT
1 1L (*6)
1 1I (*7)
4 1G
3 1F
1 1M
B-R (*6 *10)
W (*7 *10)
W (*10)
L (*10)
L (*10)
1 EA2
FL MAIN
3.0W
Battery
W-B (*10)
L (*10)
P (*10)
2
A73
Junction
Connector
I1
I5
A1
A2

* 1 :TMC Made
* 6 :130A Type Generator Assembly
* 7 :100A Type Generator Assembly
*10 :2GR-FE
*11 :2AR-FE
*12 :1AZ-FE

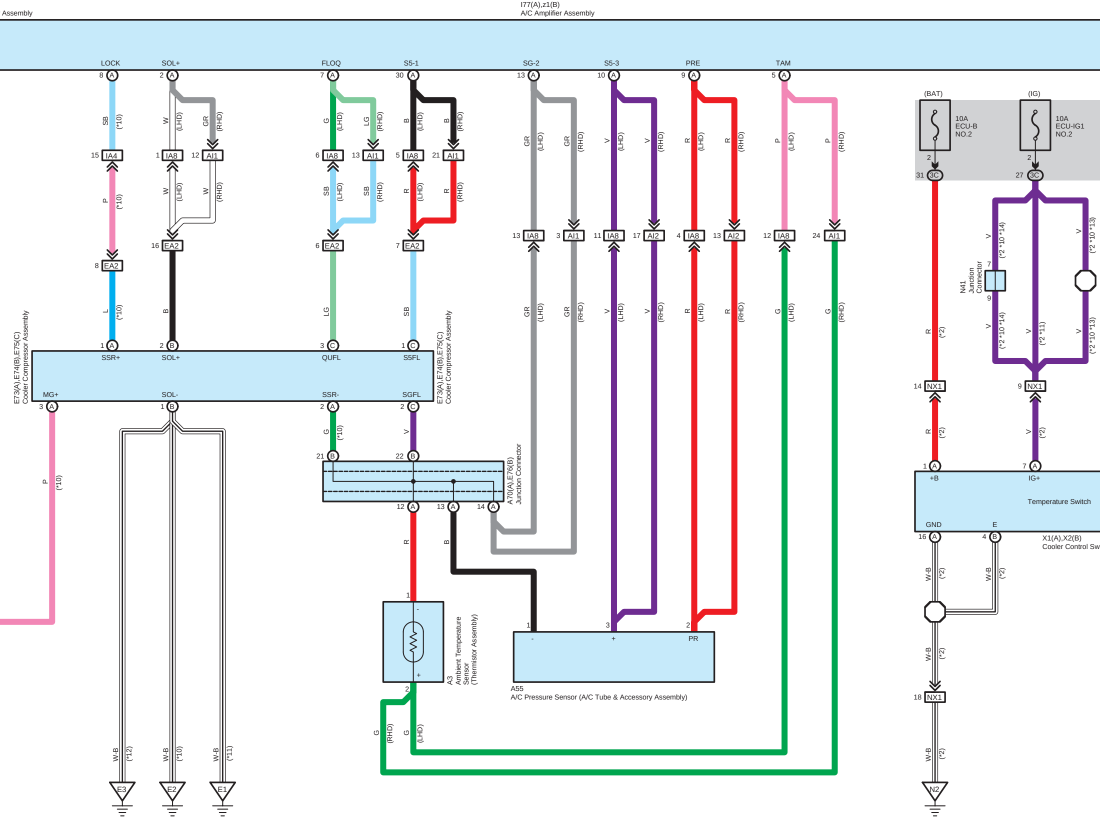
Assembly
I77(A),z1(B)
A/C Amplifier Assembly
LOCK
SOL+
FLOQ
S5-1
SG-2
S5-3
PRE
TAM
(BAT)
(IG)
10A
ECU-B
NO.2
10A
ECU-IG1
NO.2
IA4
IA8
AI1
EA2
IA8
AI2
3C
N41
Junction
Connector
NX1
E73(A),E74(B),E75(C)
Cooler Compressor Assembly
SSR+
SOL+
QUFL
S5FL
MG+
SOL-
SSR-
SGFL
A70(A),E76(B)
Junction Connector
+B
IG+
Temperature Switch
GND
E
X1(A),X2(B)
Cooler Control Sw
A3
Ambient Temperature
Sensor
(Thermistor Assembly)
A55
A/C Pressure Sensor (A/C Tube & Accessory Assembly)
-
+
PR
SB
P
L
W
GR
B
R
LG
G
V
W-B
(LHD)
(RHD)
(*10)
(*11)
(*12)
(*2)
(*2 *10 *14)
(*2 *10 *13)
(*2 *11)
E3
E2
E1
N2

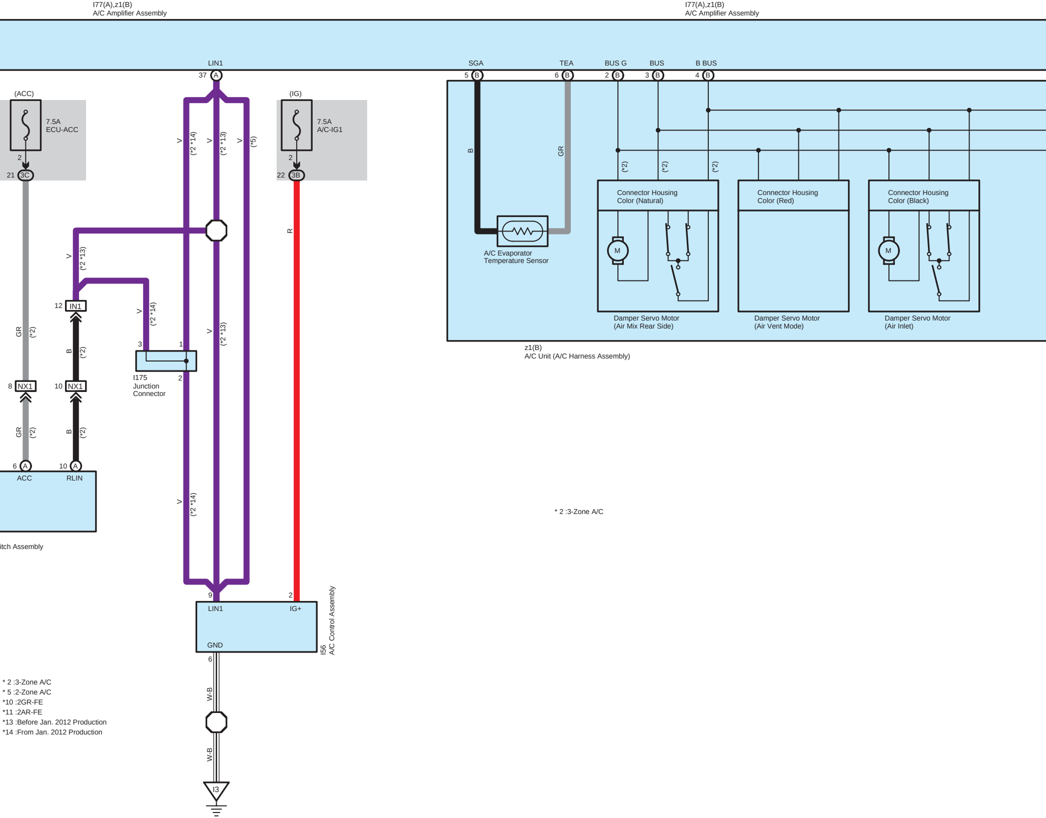
I77(A),z1(B)
A/C Amplifier Assembly
I77(A),z1(B)
A/C Amplifier Assembly
LIN1
37 A
SGA
5 B
TEA
6 B
BUS G
2 B
BUS
3 B
B BUS
4 B
(ACC)
7.5A
ECU-ACC
2
21 3C
(IG)
7.5A
A/C-IG1
2
22 3B
V (*2 *14)
V (*2 *13)
V (*5)
R
GR (*2)
B (*2)
V (*2 *13)
V (*2 *14)
12 IN1
3
1
I175
Junction
Connector
2
V (*2 *13)
8 NX1
10 NX1
GR (*2)
B (*2)
6 A
10 A
ACC
RLIN
itch Assembly
V (*2 *14)
9
2
LIN1
IG+
GND
I56
A/C Control Assembly
6
W-B
W-B
I3
B
GR
A/C Evaporator
Temperature Sensor
(*2)
(*2)
(*2)
Connector Housing
Color (Natural)
Connector Housing
Color (Red)
Connector Housing
Color (Black)
M
M
Damper Servo Motor
(Air Mix Rear Side)
Damper Servo Motor
(Air Vent Mode)
Damper Servo Motor
(Air Inlet)
z1(B)
A/C Unit (A/C Harness Assembly)

* 2 :3-Zone A/C

* 2 :3-Zone A/C
* 5 :2-Zone A/C
*10 :2GR-FE
*11 :2AR-FE
*13 :Before Jan. 2012 Production
*14 :From Jan. 2012 Production

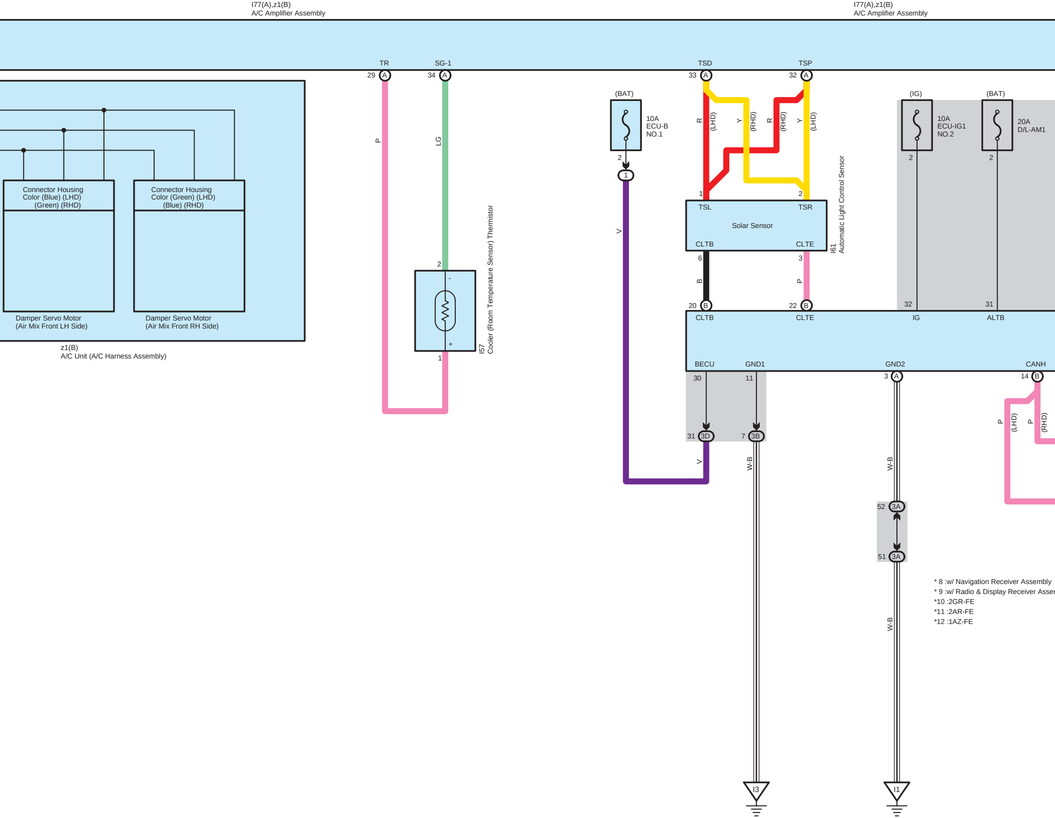
I77(A),z1(B)
A/C Amplifier Assembly
I77(A),z1(B)
A/C Amplifier Assembly
TR
SG-1
TSD
TSP
29 A
34 A
33 A
32 A
P
LG
(BAT)
10A
ECU-B
NO.1
2
1
V
R
(LHD)
Y
(RHD)
R
(RHD)
Y
(LHD)
1
2
TSL
TSR
Solar Sensor
CLTB
CLTE
6
3
B
P
I61
Automatic Light Control Sensor
(IG)
10A
ECU-IG1
NO.2
(BAT)
20A
D/L-AM1
2
2
32
31
20 B
22 B
CLTB
CLTE
IG
ALTB
BECU
GND1
GND2
CANH
30
11
3 A
14 B
31 3D
7 3B
V
W-B
W-B
52 3A
51 3A
W-B
P
(LHD)
P
(RHD)
I3
I1
Connector Housing
Color (Blue) (LHD)
(Green) (RHD)
Connector Housing
Color (Green) (LHD)
(Blue) (RHD)
Damper Servo Motor
(Air Mix Front LH Side)
Damper Servo Motor
(Air Mix Front RH Side)
z1(B)
A/C Unit (A/C Harness Assembly)
2
-
+
1
I57
Cooler (Room Temperature Sensor) Thermistor

* 8 :w/ Navigation Receiver Assembly
* 9 :w/ Radio & Display Receiver Asser
*10 :2GR-FE
*11 :2AR-FE
*12 :1AZ-FE

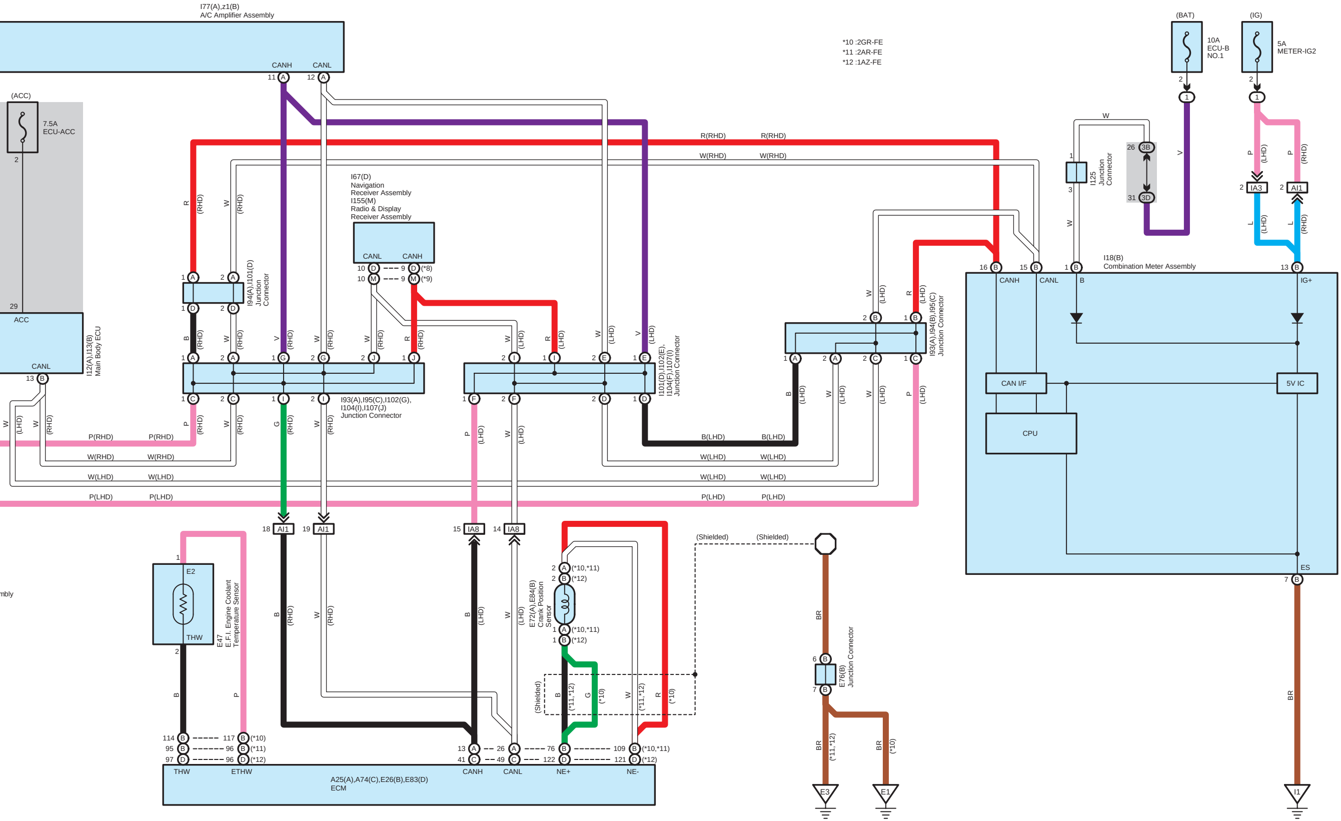
I77(A),z1(B)
A/C Amplifier Assembly
CANH
CANL
11 A
12 A
*10 :2GR-FE
*11 :2AR-FE
*12 :1AZ-FE
(BAT)
10A
ECU-B
NO.1
(IG)
5A
METER-IG2
(ACC)
7.5A
ECU-ACC
2
29
ACC
CANL
13 B
I12(A),I13(B)
Main Body ECU
R(RHD)
W(RHD)
R (RHD)
W (RHD)
I94(A),I101(D)
Junction
Connector
I67(D)
Navigation
Receiver Assembly
I155(M)
Radio & Display
Receiver Assembly
CANL
CANH
10 D 9 D (*8)
10 M 9 M (*9)
I93(A),I95(C),I102(G),
I104(I),I107(J)
Junction Connector
I101(D),I102(E),
I104(F),I107(I)
Junction Connector
I93(A),I94(B),I95(C)
Junction Connector
I125
Junction
Connector
26 3B
31 3D
W
V
P (LHD)
P (RHD)
L (LHD)
L (RHD)
2 IA3
2 AI1
I18(B)
Combination Meter Assembly
16 B
15 B
1 B
13 B
CANH
CANL
B
IG+
CAN I/F
5V IC
CPU
ES
7 B
BR
P(RHD)
W(RHD)
W(LHD)
P(LHD)
B(LHD)
G (RHD)
V (RHD)
V (LHD)
R (LHD)
W (LHD)
B (LHD)
18 AI1
19 AI1
15 IA8
14 IA8
E47
E.F.I. Engine Coolant
Temperature Sensor
E2
THW
E72(A),E84(B)
Crank Position
Sensor
2 A (*10,*11)
2 B (*12)
1 A (*10,*11)
1 B (*12)
(Shielded)
B (*11,*12)
G (*10)
W (*11,*12)
R (*10)
E76(B)
Junction Connector
6 B
7 B
BR (*11,*12)
BR (*10)
114 B 117 B (*10)
95 B 96 B (*11)
97 D 96 D (*12)
13 A 26 A 76 B 109 B (*10,*11)
41 C 49 C 122 D 121 D (*12)
THW
ETHW
CANH
CANL
NE+
NE-
A25(A),A74(C),E26(B),E83(D)
ECM
E3
E1
I1
mbly